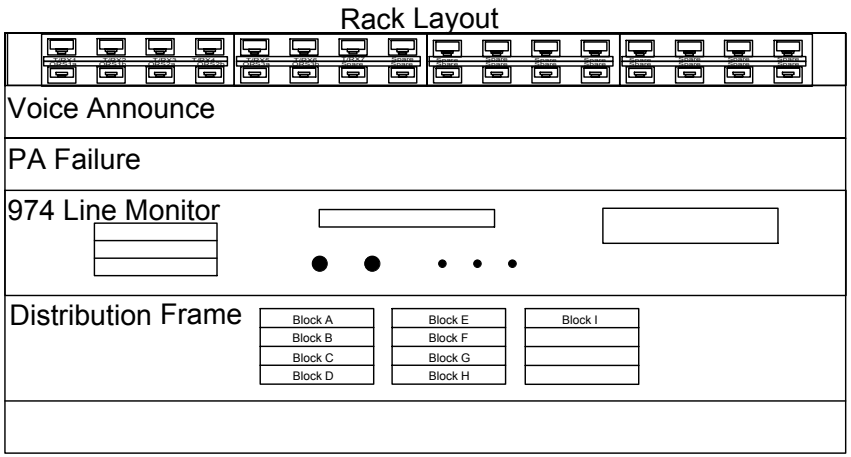


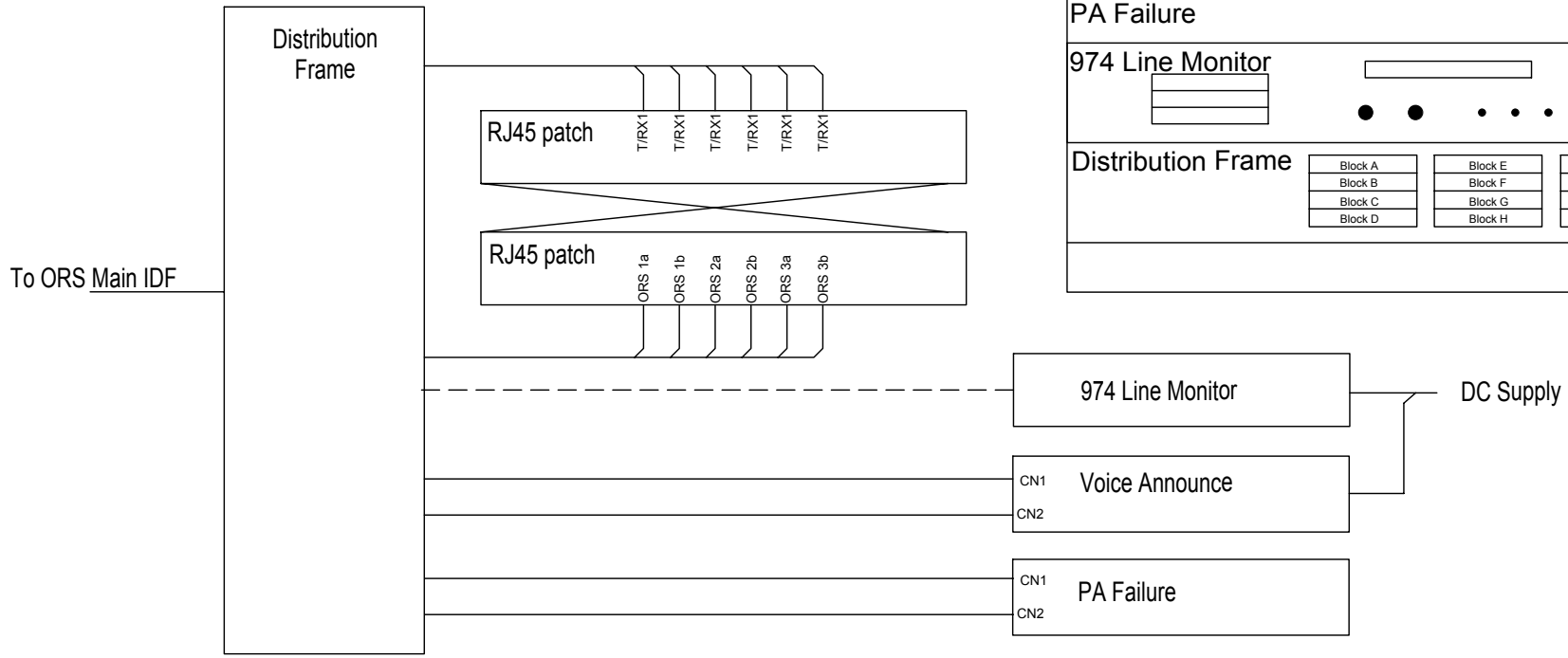


## RJ45 Patch Allocation

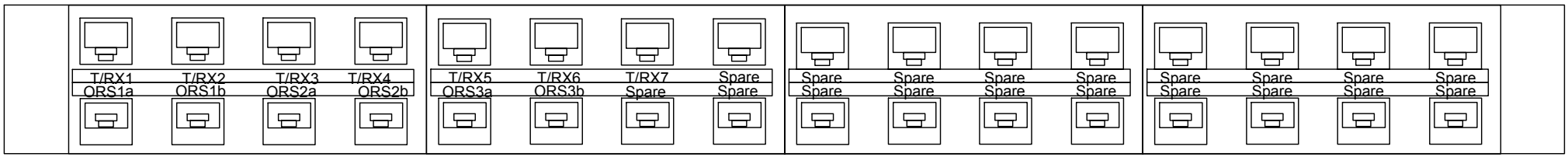


| HOLE SCHEDULE | | |
|---|---|---|
| LTR | DESCRIPTION | QTY |
| | | |

| REVISIONS | | | | | |
|---|---|---|---|---|---|
| No | ECN | DATE | DRAWN | ISSUED | REMARKS |
| | | | | | |

DIMENSIONS IN mm

MATERIAL:

FINISH:

GENERAL TOLERANCES:
WHOLE DIMS: +/-0.25mm
1 DEC PLACE: +/- 0.2mm
ANG: +/-1 deg
UNLESS OTHERWISE STATED

DESIGNED DA
DRAWN DA
DATE 04/03/05
SCALE No Scale
ISSUED
ISSUED DATE

BARRETT COMMUNICATIONS
BARRETT COMMUNICATIONS PTY LTD
8 Port Kembla Drive
Bibra Lake
WESTERN AUSTRALIA 6153
Tel: (618) 9434 1700 Fax: (618) 9418 6757

TITLE
# Wall mounted line patch and test rack

DRAWING No.
REVISION
BARRETT PART No
SHEET 1 OF 1
ORIG SIZE A4